UPLIGHT

WORKSPACE LIGHTING

This innovative 110V Uplight features a high lumen output and 360º light distribution, making it an efficient solution for Site Lighting.





Features

- Efficient 360° light distribution
- High light output, ideal for large spaces
- Complete with 3m pre-wired arctic cable and 110V 16A plug
- Aux socket for interlinking or power tools
- Convenient carry strap

Specification

Code	Description	Lumen Output	Emergency Lumen Output	Wattage	Efficacy
ULS72YPW	Uplight c/w 3m cable + plug	7920lm		72W	110 lm/W

Product Information

Warranty	2 Years
Colour Appearance (CCT)	6500K
IP Rating	IP54
IK Rating	IK07
Voltage	110V
Material (Body/Housing)	ABS
Material (Diffuser/Cover)	Polycarbonate
Colour Rendition (CRI)	Ra >80

Colour Finish	Yellow RAL1007
LED Life Expectancy	L70B50 35,000 Hours
Power Factor	0.9
Frequency	50Hz
Driver Type	Fixed Output
Approval	UKCA CE
Electrical Class	Class I
Working Temperature	-20°C to 40°C

Tel: 0114 279 8999 | **Email: sales@redarrowelectrical.co.uk** | redarrowelectrical.co.uk

Red Arrow Electrical Ltd, Cortonwood Drive, Brampton, Barnsley, S73 0UF

This document is uncontrolled if printed, all information is subject to change. Generated on 21/10/26

UPLIGHT

WORKSPACE LIGHTING

Packaging Information

Dimensions (mm)	L: 1330 x D: 820 mm
Product Net Weight (kg)	3.0 kg
Barcode	5055807620482

Box Dimensions (mm)	L: 1345 x W: 182 x D: 160 mm
Box Gross Weight (kg)	4.0 kg

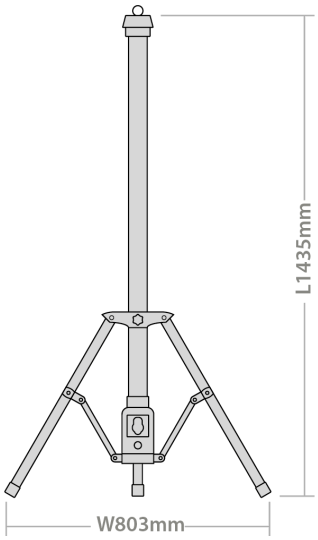

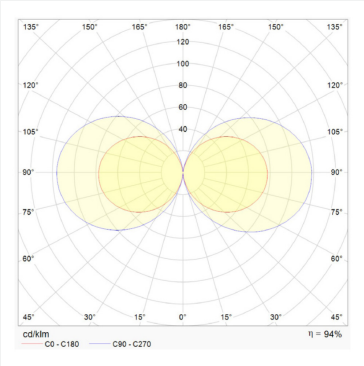

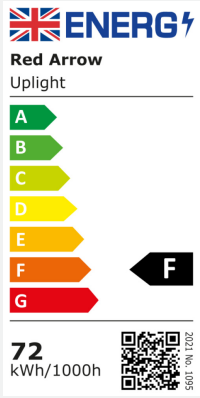

Tel: 0114 279 8999 | **Email: sales@redarrowelectrical.co.uk** | redarrowelectrical.co.uk

Red Arrow Electrical Ltd, Cortonwood Drive, Brampton, Barnsley, S73 0UF

This document is uncontrolled if printed, all information is subject to change. Generated on 21/10/26